SCHAEFF
A YANMAR BRAND

COMPACT WHEELED EXCAVATOR

TW110

POWERFUL IN USE

The high-performance excavator

The Schaeff TW110 wheeled excavator provides enormous capacity so it can also take on tasks in the next-highest weight class. Due to the extra large lift forces, the 11-ton machine can also transport especially heavy loads across the construction site and – thanks to the sensitive hydraulic system – precisely position them. The special capabilities in material logistics make the machine of particular interest for civil engineering, especially road construction. But also in gardening and landscaping where branches and tree trunks need to be seized with the grab and loaded.

Due to the latest EU Stage IV / EPA Tier 4 Final engine generation, the TW110 works economically and environmentally friendly. The integrated Schaeff Smart Control System increases efficiency, the driver determines the optimum excavator power for different applications. This minimizes losses of energy or time.

With more than 50 years of experience in wheeled excavator technology, Schaeff has extensive specialist knowledge – a prerequisite for offering machines of the highest quality for a large number of applications.

Technical specifications

Operating weight	11 - 12.5 t
Engine power	85 kW (116 hp)
Bucket capacity	149 - 477 l
Digging depth	4.3 - 4.65 m
Reach	8.3 - 8.65 m

SECURE ADVANTAGES

Schaeff Smart Control for efficient working and operation.

Ergonomic ROPS cab (FOPS optional) with excellent view and superior comfort.

High-performance, economic and environmentally-friendly EU Stage IV / EPA Tier 4 Final engine.

Rear view camera as standard.

Precise cycle times thanks to Schaeff Fingertip Control.

4 independent additional control circuits for operating of the standard work attachments.

Hydraulic, temperature-controlled reversible fan for efficient cooling.

Stable under heavy loads. Short tail – ideal in confined working conditions.

Travel speeds up to 36 kph for a rapid change of location.

Smooth automatic drive, additional accelerator pedal for delicate machine movements.

14° axle swing for stability even on rough ground.

EFFICIENT WORKING

The engine

The Schaeff TW110 wheeled excavator is driven by a EU Stage IV / EPA Tier 4 Final engine. Exhaust gas after-treatment reduces pollutants by up to 90%, including nitrogen oxides (NOx), hydrocarbons (HC) and fine dust. This is achieved through an improved combustion and injection system and a diesel oxidation catalyst (DOC). The engine does not need a particulate filter.

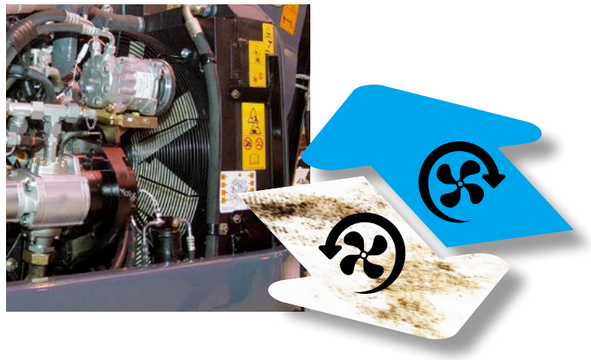

THE REVERSIBLE FAN
The hydraulically-driven reversible fan is temperature controlled. The cooling capacity automatically adjusts to the cooling requirement. The fan only runs when necessary. This saves fuel and conserves the material. The driver can switch the fan manually if required. The cleaning by reversal takes place either automatically or manually.

THE AUTOMATIC IDLING
The auto idling function (optional) saves fuel.
If there is no activity, the engine switches to the idling position – hence reducing the fuel consumption.

AUTOMATIC ENGINE SHUTDOWN
The switch-off time can be freely selected by the driver (optional).

EXPERIENCE COMFORT

The cab

The ergonomically-designed cab provides the operator with an exceptionally comfortable environment that enables a high degree of productivity. From the neatly arranged, clearly structured displays through the generously dimensioned stowage compartments to the Soft-Touch interior or the optional Klimatronik – one thing is clear: The workplace in the Schaeff wheeled excavator is designed for the driver.

DISPLAY AND INSTRUMENTS

For a clearer overview and greater convenience – work functions and machine information can be examined at a central position at a glance. The data display appears in a tiled look like a smart phone.
The anti-reflective screen with a diagonal of 7" is very clearly arranged and is also used as a monitor for the standard reversing camera.

THE KEYPAD

Extra-wide pressure surfaces make safe operation easy, even when wearing gloves. The optional immobilizer can be operated.

FURTHER ADVANTAGES

- ROPS-certified cab (FOPS optional).
- Additional mirrors for improved visibility.

PRECISE CONTROL

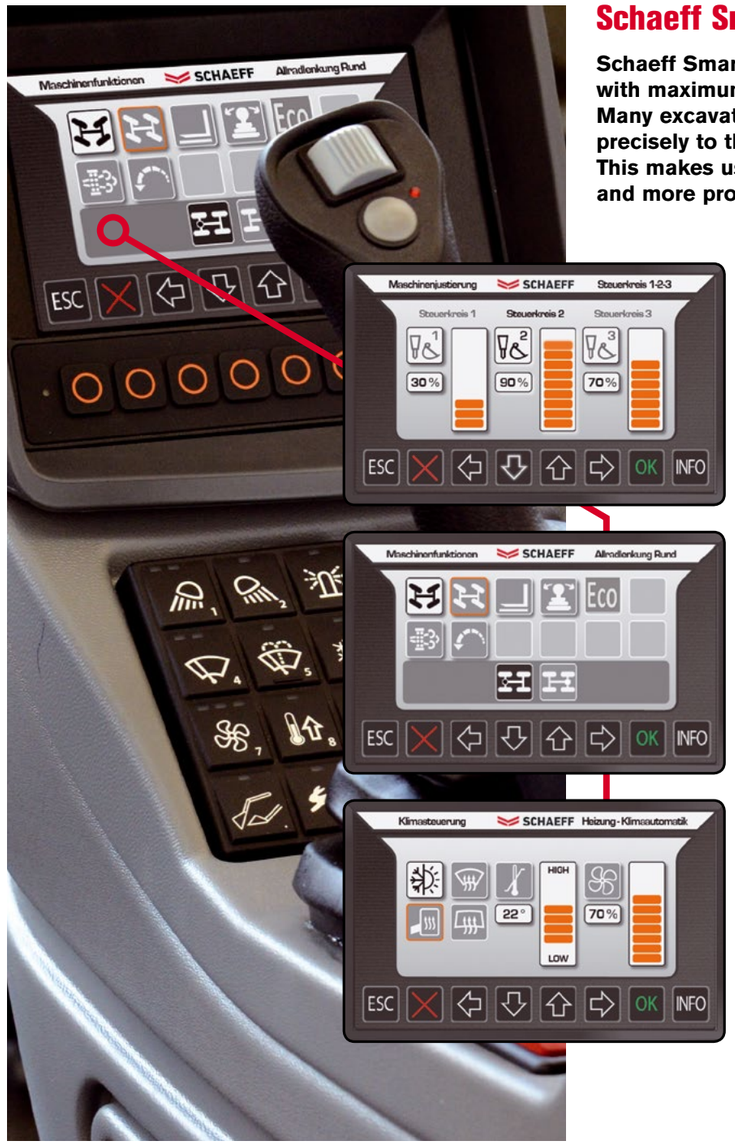

Schaeff Smart Control

Schaeff Smart Control provides the driver with maximum control over the excavator. Many excavator functions can be adapted precisely to the driver and the construction site. This makes use of the excavator more efficient and more productive.

EXEMPLARY MACHINE CONTROL

- **Hydraulic control circuits** allow fast operation. The flow rate of the control circuits is also adjusted proportionally during continuous operation via a bar chart according to use and attachment tool.
- **Eco-mode** is switched on with just the touch of a button.
- **Air conditioning control** Heating and defrosting can be adjusted exactly to the required conditions, automatic air conditioning is optional.

FURTHER ADVANTAGES

- Pilot control for all control elements; jerk-free, convenient cycle times.

Schaeff Fingertip Control

The sensitive inputs on the joystick enable high precision and ease of use. The dual-circuit hydraulic system with load independent flow sharing (LUDV) allows simultaneous, independent work movements. Economic load sensing technology ensures accurate volume control, hence saving fuel.

ACHIEVING TARGETS

COMPACT WHEELED EXCAVATOR TW110

The undercarriage

The undercarriage combines high terrain mobility with drive power. It can be configured as exactly as required due to a wide range of equipment variants.

UNDERCARRIAGE OPTIONS
- Stabilizers
- Support plate
- Front dozer blade

TIRE OPTIONS
Low-pressure tires and twin tires or wide tires are available.

STEERING
Can be equipped with two-wheel or all-wheel steering.

SPEED
A quick change of construction site or location is possible with speeds of up to 36 kph. Non-productive transport times are reduced to a minimum.

PENDULUM AXLE
Due to the pendulum axle with a pendulum angle of 14°, the wheeled excavator is absolutely stable even on uneven terrain.

LEVELING
The optional float function of the dozer blade makes leveling of the ground, the filling processes or clearing of the construction site easier.

FURTHER ADVANTAGES

- Hydrostatic travel drive, independent of the working hydraulics – also functions as an additional brake system.
- Automatic drive, additional accelerator pedal for delicate machine movements.

SPEEDING UP RESULTS

Boom and hydraulic system

Schaeff provides the right boom system for different applications. The excavation work is carried out in an optimum manner, quickly achieving the required result.

- **STANDARD ARTICULATED BOOM**
  The standard TPA booms are suitable for high-performance digging work, transport and precise positioning of heavy loads – the action radius is designed for the greatest possible working range.
- **LONG DIPPERSTICK**
  The TW110 wheeled excavator achieves a greater reach on the articulated boom due to an extended dipperstick with 2350 mm.

WEIGHT DISTRIBUTION AND LOAD CAPACITY
The laterally installed engine stabilizes the machine, especially with a fully extended, offset boom.

HYDRAULIC SYSTEM WITH FOUR INDEPENDENT CONTROL CIRCUITS
Due to the four independent control circuits, the TW110 wheeled excavator increases its capacity with attachment tools. The driver operates a tilt rotator including hydraulic quick-attach system plus a hydraulically-driven tool, such as a sorting grab, asphalt cutter or cutting unit, for example. The control circuits can be operated at the same time, they do not influence each other.

FURTHER ADVANTAGES

- Articulated joint with wide angle of articulation allows for working closely along walls.
- All cylinders have end position damping for low-vibration working.

The attachment tools

Excellent versatility thanks to numerous options and attachment tools. Tested and proven in use:

- **Light-material bucket**
- **Standard bucket**
- **Ditch-cleaning bucket**
- **Swing bucket**
- **Hydraulic cutting units**
- **Ripper tooth**
- **Adapter for rock breaker**
- **Load hook**
- **Screw-on load hook**
- **Mechanical quick-attach system**
- **Hydraulic quick-attach system**
- **Pallet forks**

MINIMIZING DOWNTIME

The service

A service bar with the central electrics is integrated in the service ladder: Hence, all relays and fuses are easy to access from the ground. The flap can be opened without tools.

For easier ascent, the ladder in the service flap is extended towards the ground. The flap is provided with rubber buffers, it lies gently on the extended ladder, the material is conserved.

There are no main hydraulic components mounted under the cab. Tilting of the cab is not required – but possible if necessary.

DIAGNOSTICS PLUG
The diagnostics plug for engine and machine data speeds up maintenance and service through better communication between man and machine.
CAN bus data is shown on the display.

FURTHER ADVANTAGES

- Easy access to the engine for low maintenance expense.
- Daily service work can be carried out from the ground, saving time.

WORKING RANGES & DIMENSIONS: TWO-PIECE ARTICULATED BOOM

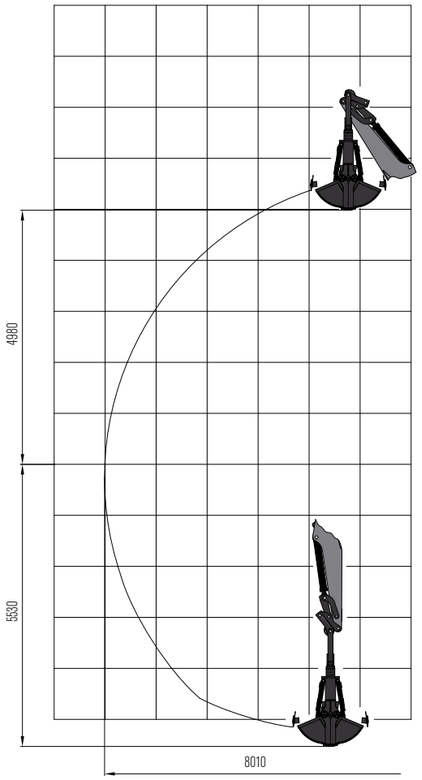

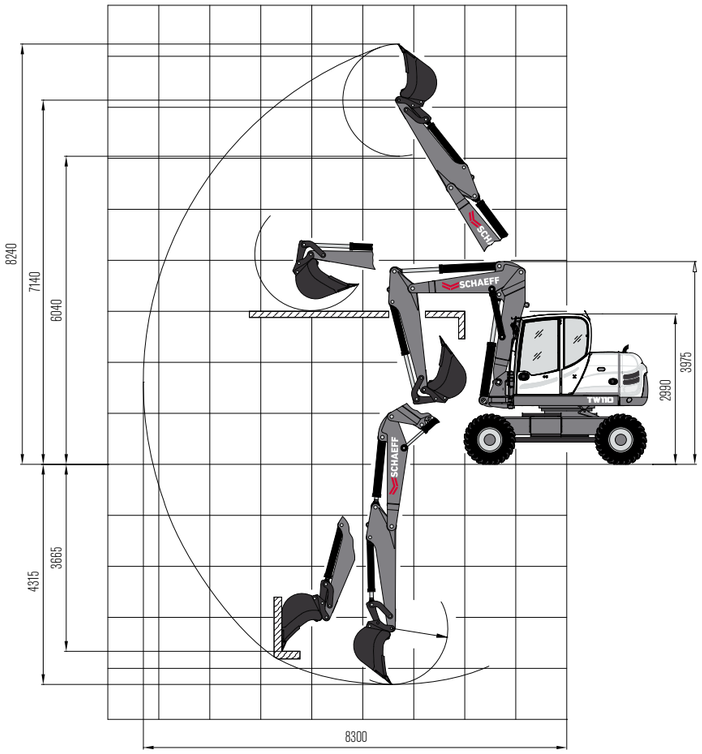

LIFTING CAPACITIES

Bucket hinge height		Load radius from center of ring gear											
Löffelstiel 2000 mm		3.0 m		4.0 m		5.0 m		6.0 m		7.0 m		7.1 m	
		End	Side	End	Side	End	Side	End	Side	End	Side	End	Side
3.0 m	A	–	–	3.11	2.63	2.44	1.91	2.39	1.31	1.98	0.92	–	–
	V	–	–	2.56	2.40	1.76	1.71	1.28	1.18	0.92	0.83	–	–
1.5 m	A	4.91	3.87	3.11	2.51	2.72	1.79	2.71	1.25	1.94	0.89	1.89	0.83
	V	3.88	3.54	2.51	2.30	1.77	1.62	1.20	1.13	0.83	0.78	0.80	0.74
0 m	A	6.50	3.60	3.88	2.36	3.00	1.68	2.57	1.22	1.79	0.88	1.79	0.85
	V	3.65	3.31	2.35	2.21	1.65	1.54	1.18	1.12	0.84	0.79	0.82	0.76
-0.9 m	A	7.26	3.43	4.25	2.16	3.34	1.50	2.51	1.11	1.77	0.86	–	–
	V	3.43	3.25	2.27	2.04	1.59	1.43	1.15	1.03	0.87	0.81	–	–

All values in tons (t) were determined acc. to ISO 10567 and include a stability factor of 1.33 or 87% of the hydraulic lifting capacity. All values were determined with load hook. If a bucket is attached, the difference weights bucket minus load hook must be deducted from the permissible payloads. When used for load hook applications, excavators must be equipped with hose-rupture valves and overload warning device in compliance with EN 474-5.
Working equipment: Two-piece articulated boom, twin tires, dipperstick 2000 mm
Abbreviations: S = Supported by blade, T = Traveling

DIMENSIONS

Fig. 1:
Excavation within the entire width of the machine

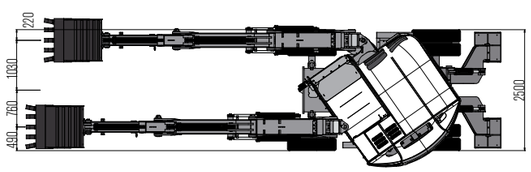

Fig. 2:
Working envelope

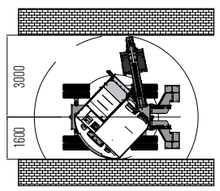

Fig. 3:
Transport position

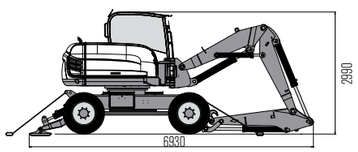

SPECIFICATIONS

ENGINE

Manufacturer, model	Deutz, TCD3.6 L4
Type	4-cylinder turbo diesel engine with intercooler, EU Stage IV / Tier4 Final
Combustion	4-stroke cycle, Common Rail injection
Displacement	3600 cm^3
Net power rating at 2000 rpm (ISO 9249)	85 kW (116 hp)
Torque	400 Nm at 1600 rpm
Cooling system	Water

ELECTRICAL SYSTEM

Nominal voltage	12 V
Battery	12 V / 135 Ah
Generator	14 V / 95 Ah
Starter	12 V / 4.0 kW

TRANSMISSION

Hydrostatic travel drive in closed circuit with automatic adjustment of drawbar pull and speed irrespective of the working hydraulics. 4-wheel drive from reduction gear on front axle via cardan shaft to rear axle. Infinitely variable speed control forward and reverse.

2 speed ranges:	
"Low"	0 – 6 kph
"High"	0 – 20 kph
4 speed ranges (high-speed version optional):	
"Low"	0 – 6 / 0 – 19 kph
"High"	0 – 11 / 0 – 36 kph

AXLES

Front: oscillating planetary drive axle, oscillating angle 13°.

Rear: rigid planetary drive axle.

TIRES

Standard	9.00-20, 14 PR twin tires

BRAKES

Service brake: Hydraulic pump accumulator two-circuit brake, acting on oil-immersed multi-disc brakes of front and rear axle.

Excavator brake: Acting on front and rear axle due to lockable service brake.

Auxiliary brake: Hydrostatic travel drive in closed circuit acting as non-wearing auxiliary brake.

Parking brake: Hydraulic spring-loaded brake, electrically actuated.

STEERING

Fully hydraulically controlled front axle with integrated steering cylinder.

Max. steering angle	30°

SWING SYSTEM

Hydrostatic drive with 2-stage planetary gear and axial piston fixed displacement motor, also acts as wear-restistant brake. In addition, automatically controlled spring-loaded multi-disc brake acting as parking brake.

Swing speed	0-10 rpm

KNICKMATIK®

Lateral parallel adjustment of boom arrangement at full dig depth.

Angle of articulation / lateral adjustment left	54° / 760 mm
Angle of articulation / lateral adjustment right	54° / 1030 mm

FLUID CAPACITIES

Fuel tank	185 l
AdBlue tank	10 l
Hydraulic system (incl. tank 60 l)	190 l

OPERATING DATA, STANDARD EQUIPMENT

Operating weight (two-piece articulated boom "TPA") acc. to ISO 6016	11,000 kg
Total length, travel position (TPA boom)	5860 mm
Total height, travel position (TPA boom)	3975 mm
Transport dimensions: TPA boom (L x H)	6800 x 2990 mm
Total width (twin tires)	2500 mm
Total height (top of cab)	2990 mm
Tread width	1942 mm
Wheelbase	2570 mm
Ground clearance below cardan shaft	440 mm
Turning radius	7200 mm
Uppercarriage tailswing	1600 mm
Uppercarriage frontswing	3000 mm
Working envelope 180°	4600 mm
Working envelope 360°	6000 mm
Bucket digging force acc. to ISO 6015	72,000 N
Ripping force acc. to ISO 6015	58,500 N

HYDRAULIC SYSTEM

Travel hydraulics: Closed circuit, independent from working hydraulics.	
Pump capacity, max.	180 l/min
Working pressure, max.	420 bar
Working hydraulics: Axial-piston variable displacement pump with load sensing, coupled with a load independent flow sharing (LUDV). Simultaneous, independent control of all movements. Sensitive maneuvers irrespective of loads.	
Pump capacity, max.	190 l/min
Working pressure, max.	330 bar
The thermostatically controlled oil circuit ensures that the oil temperature is promptly reached and avoids overheating. Hydraulically driven fan with reversing function. Return filter installed in oil tank allows for eco-friendly replacement of filter elements..	
Triple gear pump for all positioning, swing movements and hydrostatic fan.	
Pump capacity, max.	38 + 38 + 38 l/min
Working pressure, max.	230 bar
Control circuit for work attachments (proportionally operated):	
Pump capacity, adjustable	20 – 130 l/min
Working pressure, max.	300 bar
Two servo-assisted joystick controls (ISO) for excavator operations.	

CAB

Spacious, sound-insulated full-vision steel cab (ROPS certified). Sliding window in cab door. Safety glass windows, thermo windows tinted in green. Skylight thermo window, bronze tinted. Panoramic rear window. Front window supported by pneumatic springs, lockable for ventilation and slidable under cab roof. Windshield washer system. Storage compartment. Preparation for radio installation. Left-hand outside rear-view mirror.

Cab heating with windshield defroster through coolant heat exchanger with continuous fan. Fresh air and recirculating air filters.

Rearview camera

Operator's seat MSG 85 (comfort version), hydraulic damping, extra-high backrest, tilt-adjustable armrests, longitudinal-horizontal suspension, mechanical lumbar support. Lap belt.

Instrument panel on the right hand side of the operator's seat with visual & acoustic warning device, hour-meter and safety module.

Working flood lights Halogen H-3.

Sound power level L_{WA}	100 dB (A)
Sound pressure level L_{pA}	74 dB (A)
Sound level values measured in compliance with Directive 2000/14/EC and EN474.	
Effective values of acceleration for whole body	less than 0.5 m/s^2
Effective values of acceleration for hand-arm	less than 2.5 m/s^2
Vibration values in compliance with Directive 2006/42/EC and EN474.	

EQUIPMENT

DIESEL ENGINE

	Standard	Option
Intercooler	•	
Direct electronic fuel injection / common rail	•	
Diesel particulate filter (DPF)	Country specific	
Automatic idle incl travel drive shut down		•
Automatic engine shut down		•
Temperature-dependent reversing fan	•	

BOOM SYSTEMS

Two-piece articulated boom (TPA), with dipperstick 2000 mm	•	
Two-piece articulated boom (TPA), with dipperstick 2350 mm		•
Two-piece articulated boom (TPA), with "Atlas" dipperstick 1850 mm		•

TRAVEL DRIVE

All-wheel drive, single-axle steering, 20 kph	•	
All-wheel drive, single-axle steering, 25 or 36 kph		•
All-wheel drive, all-wheel steering, 20, 25 or 36 kph		•

SUPPORT SYSTEMS

Front dozer blade, 2500 mm wide		•
Rear support blade, 2500 mm wide		•
Rear outrigger plates, flat	•	
Rear outrigger plates, rubber-coated		•

TIRES

Twin tires 9.00-20 14PR, with intermediate rings	•	
Single tires 600/40-22.5		•
Single tires 315/70 R22.5		•

HYDRAULIC SYSTEM

LUDV working hydraulics, axial piston pump with load sensing	•	
Control circuit for work attachments with continous operation	•	
Schaeff 'Fingertip' control incl. 2nd additional control circuit on left joystick		•
Schaeff 'Fingertip' control incl. 2nd & 3rd additional control circuit on left joystick		•
Dozer blade float position		•
Excavator control changeover: ISO-SCHAEFF		•
Excavator control changeover: ISO-SAE		•
Bucket control changeover in case of forklift operation		•
Steering change-over in case of blade operation		•
Hydraulic installation for quick-attach system		•
Open return	•	
Hose-rupture / load-retaining valves for boom, intermediate boom and dipperstick cylinders	•	
Supplementary set hose-rupture / load-retaining valves for TPA boom, bucket cylinder		•
Biodegradable hydraulic oil / ester-based HLP 68 (Panolin)		•

QUICK-ATTACH SYSTEM

Quick-attach system, mechanical, incl. pins for mounting of quick-attach system	•	
Bucket pins for quick-attach system / Schaeff		•
Bucket pins for direct mounting / Lehnhoff QAS		•
Quick-attach system, mechanical (Lehnhoff) MS08, with load hook		•
Quick-attach system, hydraulic (Lehnhoff) type HS 08, with load hook		•

CAB

	Standard	Option
ROPS steel cab, safety glazing, skylight window, hot water heating, sliding window in cab door, window washing system, working floodlight	•	
Operator's seat MSG 85, comfort version, hydraulic damping, extra-high backrest, longitudinal-horizontal suspension, mechanical lumbar support	•	
Operator's seat MSG 95, premium version, air damping, extra-high backrest, longitudinal-horizontal suspension, seat and backrest heating, mechanical lumbar support		•
Sliding window on right-hand side		•
FOPS-Guard for skylight window		•
Independent diesel heating with fresh air circulation and timer		•
2 kg ABC powder fire extinguisher		•
Schaeff coolbox		•
Air-conditioning (Climatronic)		•
Radio installation kit (without radio, incl. speakers)		•
Headrest		•

OTHER OPTIONAL EQUIPMENT

Rear view camera	•	
Fan guard	•	
Battery disconnector	•	
Option package Lighting: rotating beacon, working floodlight cab-mounted, rear right and front right, working floodlight boom-mounted		•
Option package Safety: immobilizer (coded key), motion alarm, fire extinguisher 2 kg		•
Option package Comfort: MSG 95, auto idling, air-conditioning		•
Additional rear weight, approx. 350 kg		•
Anti-theft device (immobilizer)		•
Electrical refuelling pump		•
Boom-mounted working floodlight (also available as LED version)		•
Lighting package: Double beam working floodlight - cab-mounted rear right, working floodlight cab-mounted - front right (also available as LED version)		•
Yellow rotating beacon, attachable (also available as LED version)		•
Back-up alarm, signal-horn		•
Central lubrication system		•
Grab transport lock / piped		•
Outside rear-view mirror, heatable		•
Additional tool box		•

WORK ATTACHMENTS (BUCKETS)

Option package Bucket 1: bucket 600 mm / 254 l, bucket 1000 mm / 477 l, swing bucket 1500 mm / 371 l		•
Bucket, 600 mm wide, QAS, capacity 254 l		•
Bucket, 1000 mm wide, QAS, capacity 477 l (max. 1.5 t/m³)		•
Swing bucket, 1500 mm wide, QAS, capacity 371 l (max. 1.24 t/m³)		•

OTHER WORK ATTACHMENTS

Hammer holder, plate without boring, QAS, Schaeff		•
Bolt-on load hook for bucket rod		•
Hammer adapter, type MS 08		•
Fork carrier, QAS, 1240 mm wide, ISO 2328, class 2, form B		•
Forks, 1100 mm long, 100 x 45 mm		•

Further optional equipment available on request

SCHAEFF
A YANMAR BRAND

Yanmar Compact Germany GmbH
Kraftwerkstrasse 4
74564 Crailsheim, Germany

www.schaeff-yanmar.com